AP 600

1:1

Surface-mounted range

Material
Duroplastic

Colours

ivory	similar RAL 1013
white	similar RAL 9010

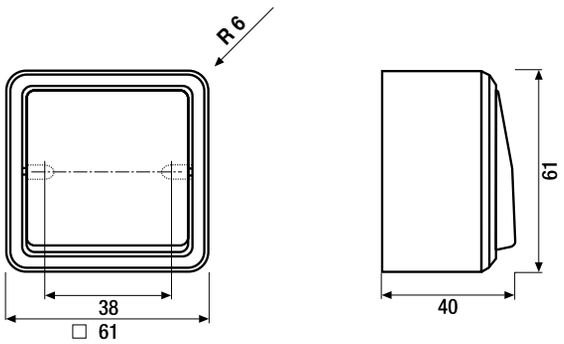
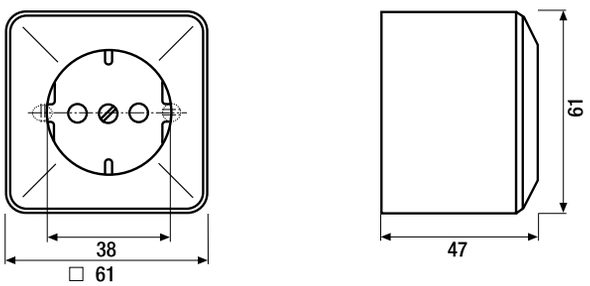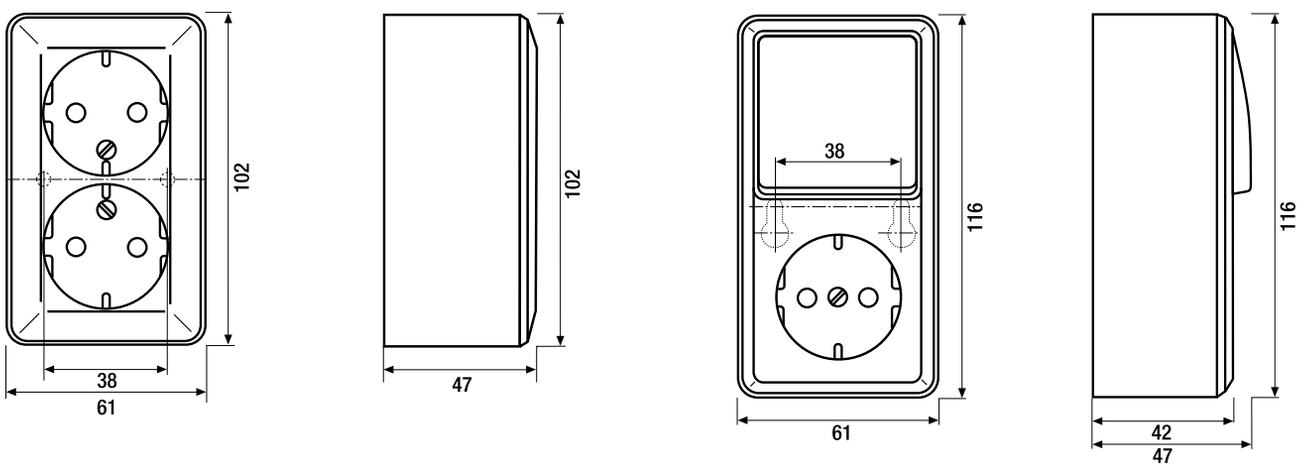
Dimensions
Switch (WxHxD)
61 mm x 61 mm x 40 mm
Socket (WxHxD)
61 mm x 61 mm x 40 mm
Combinations
Switch/socket (WxHxD)
61 mm x 116 mm x 47 mm
Corner radius of housing R 6